Products Guide

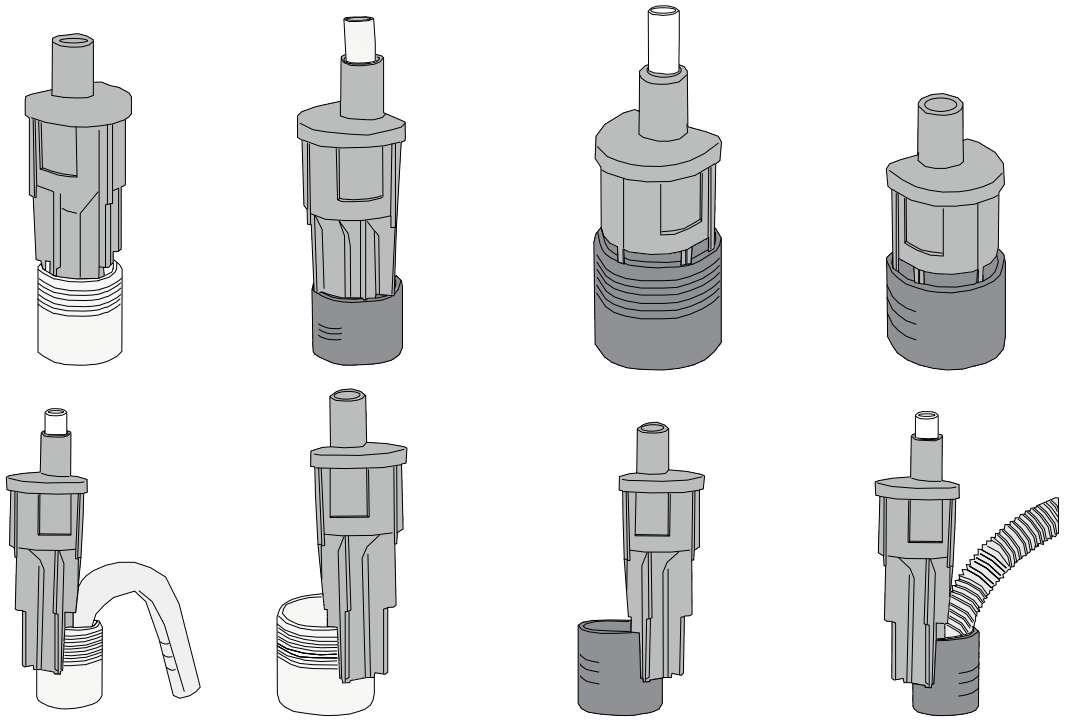

www.airgap.com

Introduction

Air Gap International has been designing, manufacturing, and supplying patented, plumbing code listed Air Gap units to the water treatment industry for over 30 years. Our philosophy has been to provide high performance, easy to install airgaps at a reasonable price. We offer the most diverse line of air gap products: Water Softener, back washable filters, Reverse Osmosis, kidney dialysis and unique dishwasher air gaps which required by UPC code as well as unique connection couplings and drain line fittings.

Air gap fittings are required by plumbing code to mount in the drain line (waste line) of water treatment equipment and their primary purpose is to prevent non-potable water from flowing backwards and mixing and contaminating potable (drinking) water. One could think of the function of an air gap fitting as a no-fail check valve but without an internal seat or any moving parts. Properly designed and installed, air gaps, like check valves, allow water to flow only in the desired direction.

The key characteristics for an air gap is protection from back flow and back siphonage. Back flow occurs when there is a clog or blockage downstream in the drain line which with more water entering causes the nonpotable water to back up fully engulfing the air gap unit or at least reach in the back siphonage critical level (C/L) of the air gap unit. Back siphonage happens when there is suction on the potable water line and air gap inlet that sucks non-potable water back into the potable (drinking) water line. The ideal air gap provides protection from back flow and back siphonage.

A true air gap is a physical separation in the drain line that one could pass their hand through. All existing air gap fittings if properly installed, it will prevent a back siphonage.

Notes:

Water Softener Air Gaps

Key Consideration

Water Softener air gaps typically are installed near the laundry facilities in the garage, basement or in the laundry room for convenient access to the house drainage piping. In many cases there almost never exists a dedicated (unused) standpipe just waiting to be used by the installer to mount the drain line air gap. Thus the critical feature of the air gap is its ability to share a standpipe with the washing machine or other equipment drain hose.

Dual Dishwasher Air Gaps

Key Consideration

Dual dishwasher air gaps provide the necessary backflow and back siphonage protection for two dishwashers – the popular dual Dishdrawer™, or for a dishwasher and an undersink (RO) unit in a single space saving body. Typically the homeowner has an existing single inlet dishwasher air gap unit as they have been a "UPC" code requirement for 40 plus years, and may like to keep their existing decorative cap. Installers would like the dual dishwasher air gap to be easy to install, multifunctional and compact as possible.

Notes:

Mr. Drain™

UNIVERSAL AIR GAP DRAIN

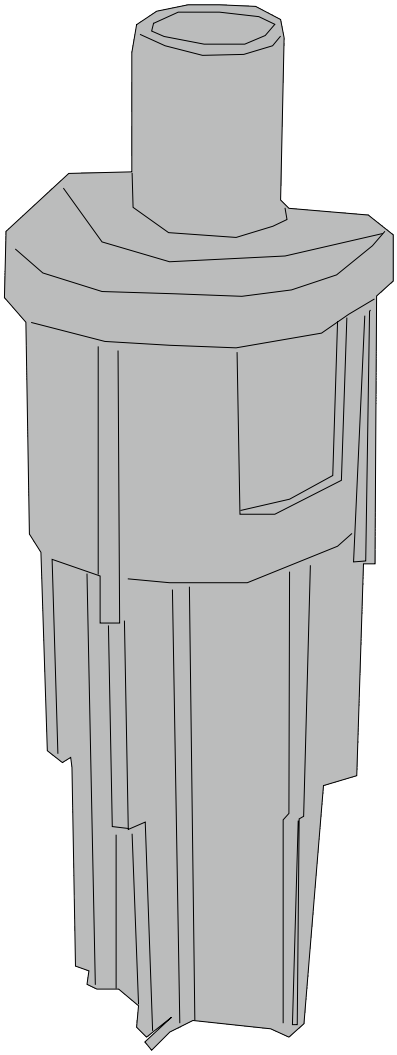

Order #: AG100-001

Part #: (34700)

Features

- Fits 1 1/2¨ or 2¨, metal or plastic, standpipes. Unit housing length is 5 1/2¨ (13.97 cm)
- Recommended usage 1 to 7 G.P.M.(3.7 to 26.5 Liters/minute). Tested at 15 G.P.M (56.8 Liters/minute)
- Designed to allow soft rubber washer hose or washer metal drain hook to share the same standpipe
- Inlet port fits 1/2¨ SCH 40 PVC slip fittings or our own couplings shown below
- Provides more than twice the code required minimum air gap opening
- Can be mounted at 3 different levels
- NSF® and UPC® listed

Note

You can install two Mr. Drain units back to back on the 1 1/2" or 2¨ standpipes if your need is greater than 7 GPM. You would need to split the incoming water so that approximately half of the inflow would be passing through each Mr. Drain air gap unit. A molded plastic barb fitting 5/8¨ O.D. would push into each inlet port.

Accessories

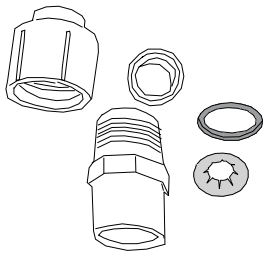

Order #: AG170-003

211213S , COUPLING ADAPTER , 1/2" SLIP X 5/8" O.D COMP.FOR AG200 SERIES/AG100 /AG150 SERIES INLET CONNECTION

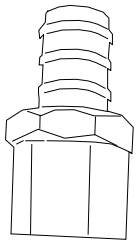

Order #: AG170-005

51024, WHITE 5/8" ID INSERT BARB X 1/2" PVC SLIP FOR AG 100 SERIES INLET PORT

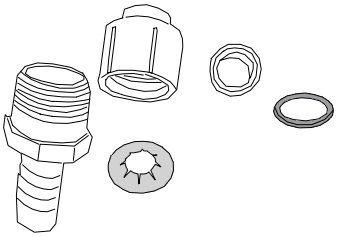

Order #: AG170-006

211217, 1/2" INSERT BARB X 5/8" O.D. COMPRESSION COUPLING FOR AG100 SERIES INLET CONNECTION

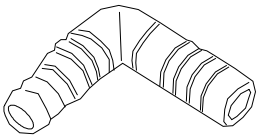

Order #: AG170-008

8504, DUAL BARB ELBOW FOR AG100/AG130-001 INLET CONNECTION,1/2" INSRT BARB X 1/2" ID /5/8" ID INSERT

Applications

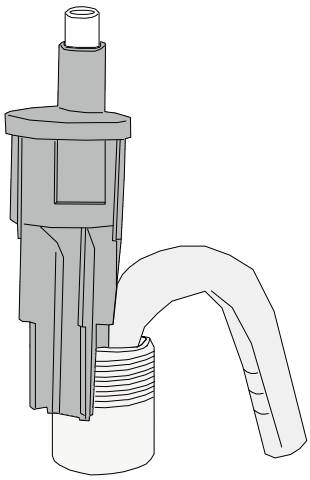

Mr. Drain mounted on a 1 1/2˝ metal pipe with metal washer drain hook.

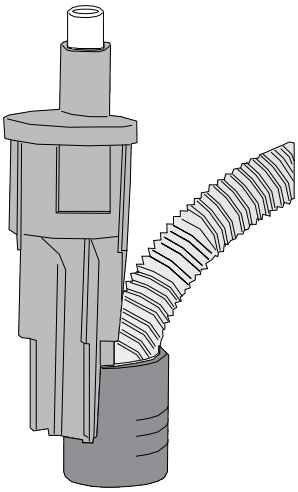

Mr. Drain sharing 1 1/2˝ plastic standpipe with washing machine waste hose.

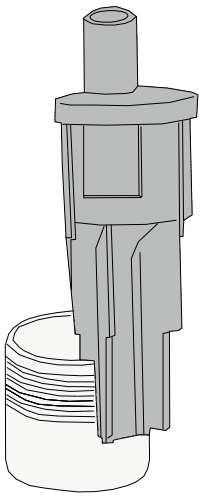

Mr. Drain mounted on a 2˝ metal pipe.

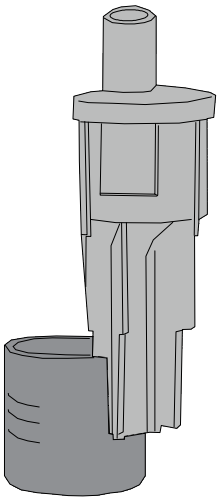

Mr. Drain mounted on a 2˝ plastic pipe.

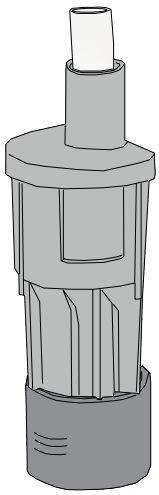

Mr. Drain inside a 1 1/2˝ plastic pipe.

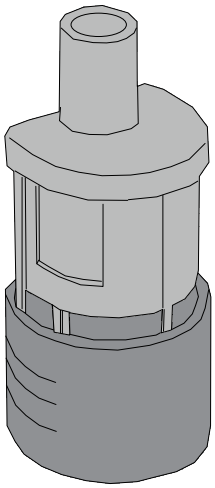

Mr. Drain inside a 2˝ plastic pipe. Accepts 5/8˝ I.D. poly tubing.

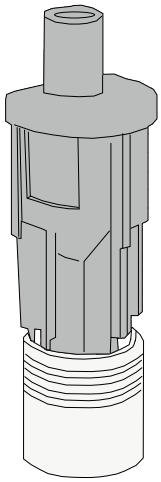

Mr. Drain inside a 1 1/2˝ metal pipe.

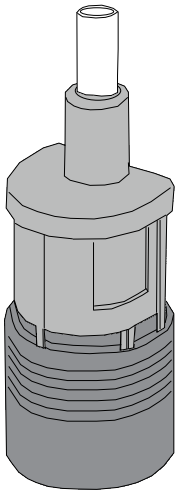

Mr. Drain inside a 2˝ metal pipe.

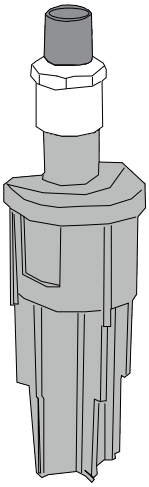

Mr. Drain with AG170-005 fitting (accepts 5/8˝ I.D. poly tubing).

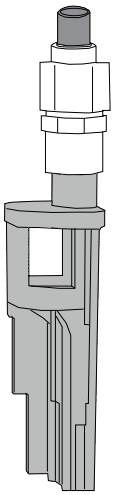

Mr. Drain with AG170-003 coupling (accepts 5/8˝ O.D. poly tubing), also accepts 1/2˝ PVC slip fittings.

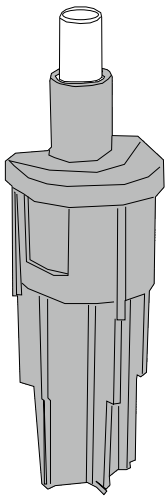

Mr. Drain with tube inside inlet port. 5/8˝ O.D. poly tubing fits snugly inside Mr. Drain's inlet port.

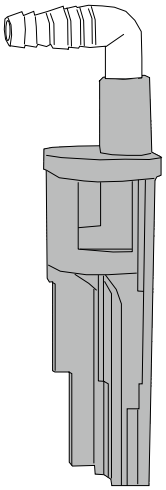

Mr. Drain with dual barb elbow AG170-008 that fits 1/2˝ and 5/8˝ I.D. poly tubing.

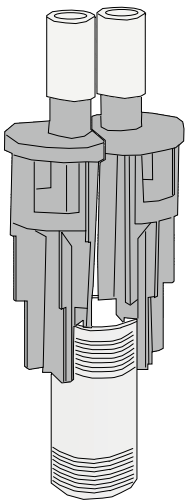

2 Mr. Drain mounted on a 1 1/2˝ metal pipe.

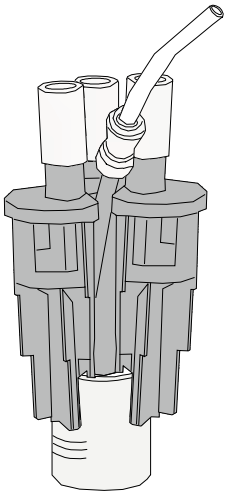

3 Mr. Drain mounted on a 2˝ plastic pipe.

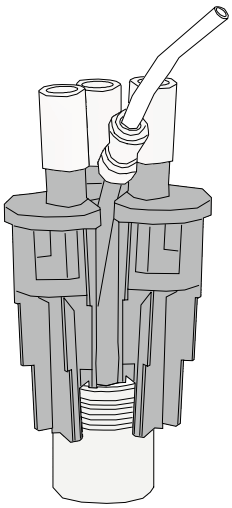

3 Mr. Drain mounted on a 2˝ metal pipe.

Dialygap™

DUAL INPUT KIDNEY DIALYSIS AIR GAP

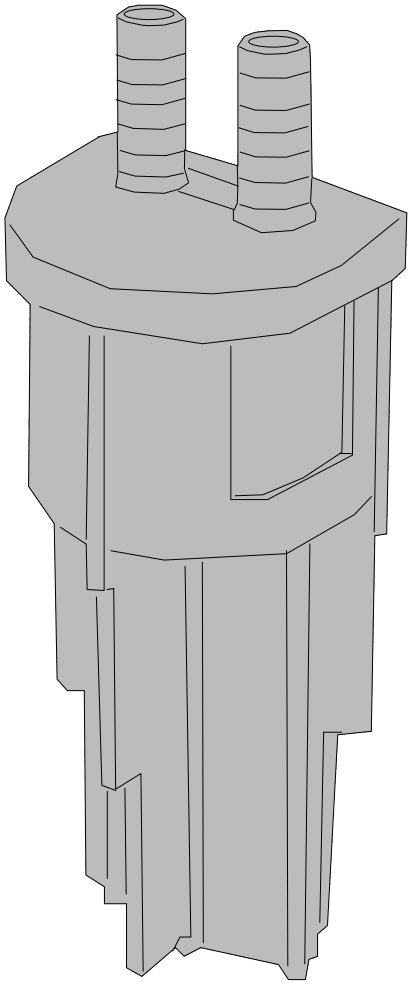

Order #: AG100-002

Part #: 34800

Features

- Dual input kidney dialysis air gap.
- Inlet ports fit 3/8" I.D. reinforced tubing.
- Unit fits on outer lip or inside of 1 1/2" or 2" metal or plastic standpipe.
- NSF® and UPC® listed.

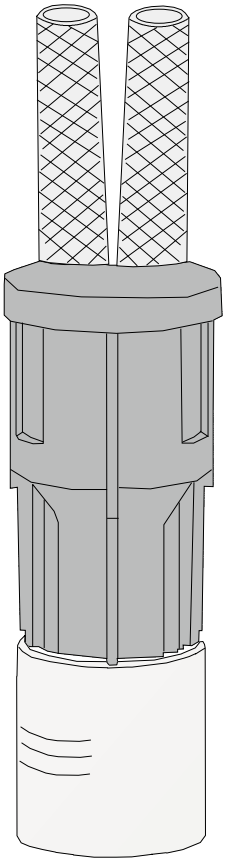

Dialygap with tubing inside 1 1/2¨ standpipe.

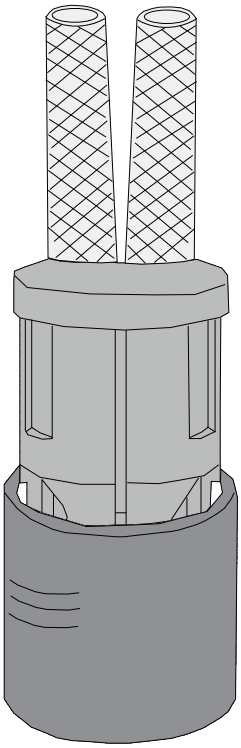

Dialygap with tubing inside 2¨ standpipe.

GAP-A-RO™

REVERSE OSMOSIS AIR GAP DRAIN

Model: 31-S

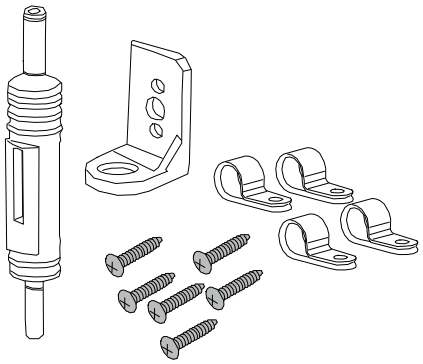

Order #: AG110-001

KIT S-A REVERSE OSMOSIS AIR GAP DRAIN

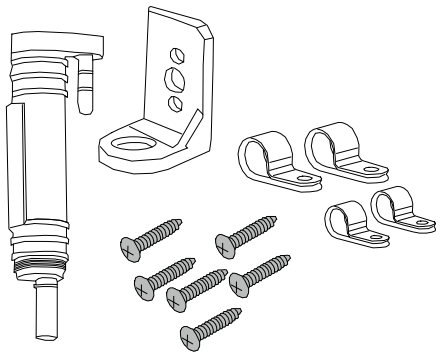

Order #: AG110-002

KIT S-B REVERSE OSMOSIS AIR GAP DRAIN

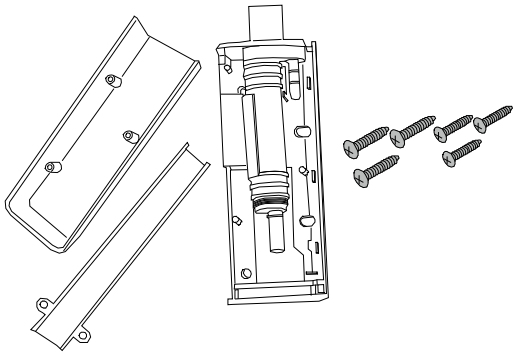

Order #: AG110-003

KIT S-C REVERSE OSMOSIS AIR GAP DRAIN

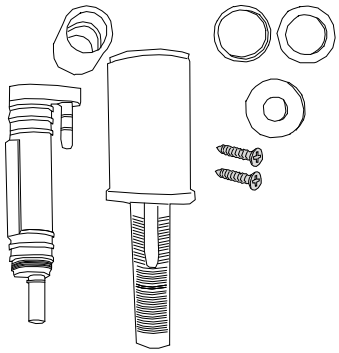

Order #: AG110-004

KIT S-D REVERSE OSMOSIS AIR GAP DRAIN

Features

- Easy connection to inlet and outlet ports. Depending on product chosen, inlet ports fit 1/4¨ or 3/8¨ flexible poly tubing. All outlet ports fit 3/8¨ poly tubing
- AG110-001 and AG110-002 unit housings length are 3¨ (7.62 cm) long
- Kit AG110-003 provides compact air gap unit and convenient mounting arrangement for RO type water coolers
- Kit AG110-004 provides a convenient alternative to include a plumbing code listed air gap unit in the indirect drain piping; if a dispensing faucet is not needed or is to be remotely located or if installer prefers not to use an air gap style dispensing faucet
- Unit designed and lab tested at over 1/2 G.P.M. (2 Liter/minute), depending on the style of unit
- Optimum suggested usage approximately 1 to 16 oz/min. (30 to 500 milliliters/minute)
- Vertical wall mounting bracket and screws included
- NSF® and UPC® listed

Configurations and Mounting Arrangements

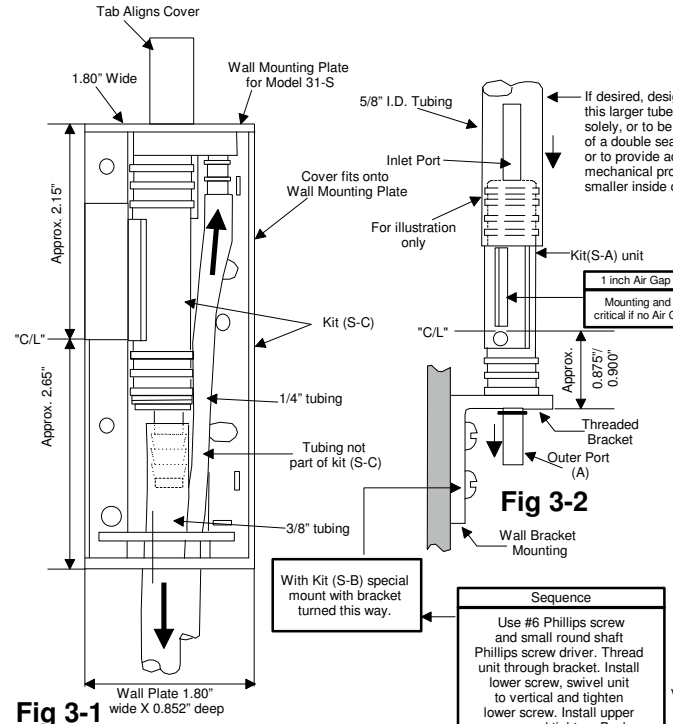

Fig 3-1

Fig 3-2

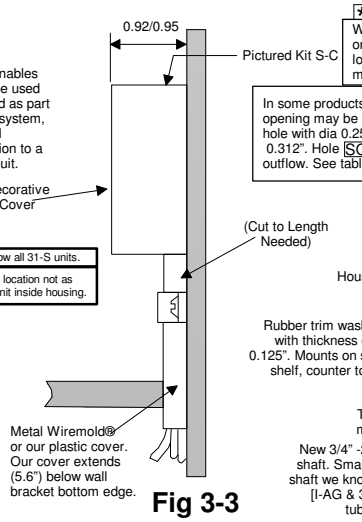

Fig 3-3

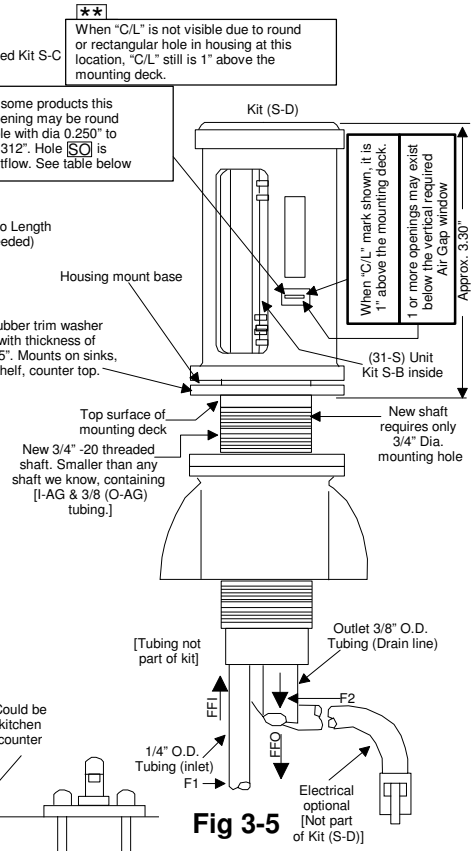

Fig 3-5

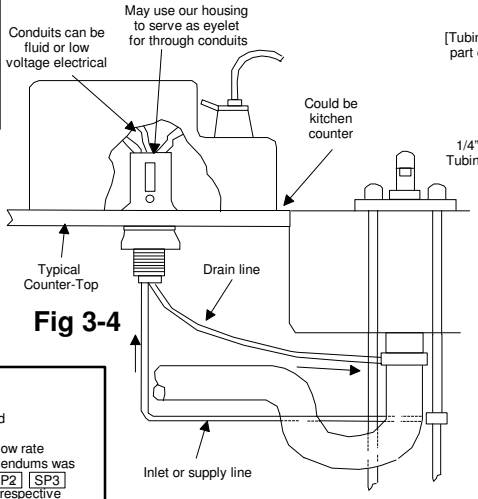

Fig 3-4

**
Do not mount counter top housing [Fig. 3-5 (Kit S-D)] in a well, recess, or any other place, unless the receptacle flood level is below the Air Gap unit "C/L" as defined by manufacturer's instructions.

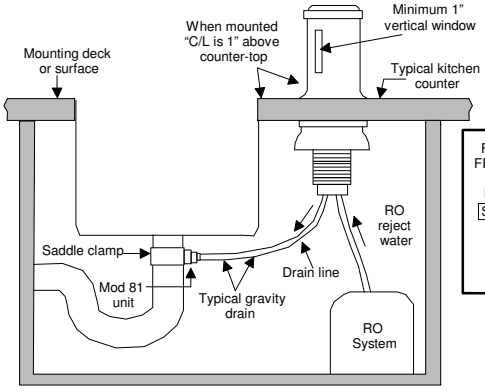

Fig 3-6

FFI – Forward Flow In
FFO – Forward Flow Out
B – Forward Flow where noted
BF – Backflow where noted
SP – Unless otherwise noted, flow rate data for A3, A4, & A5 addendums was obtained using SP1, SP2, SP3 spacings as noted on the respective addendums A3-1, A4-1, A5-1.

As modified here this unit also has good backflow side discharge along with good forward flow and can mount very near the top. After model 31-TT, this modified units the next best choice for installing in a cabinet. This unit also is a very good choice for mounting on back side of an "RO" cooler. Mount with port stub F6 parallel to back of cooler.

Flow rates with no contamination of inlet nozzle or 1" Air Gap (All flows exiting at SO)
Flow rates include 33% safety factor

Unit	Max (F1) only	Max (BF2) only	Max SO
Fig 3-5	3 oz/min.	6 oz/min.	9 oz/min.
Fig 3-8	9 oz/min.	11 oz/min.	15 oz/min.

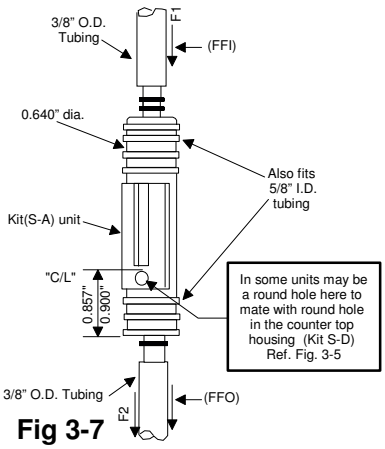

Fig 3-7

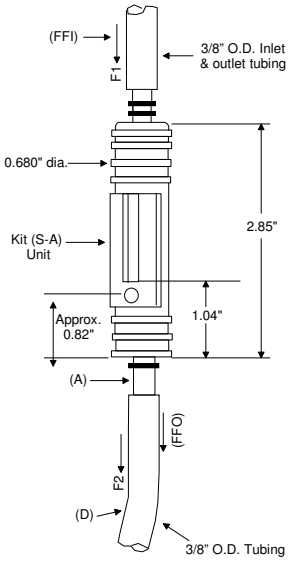

Fig 3-8

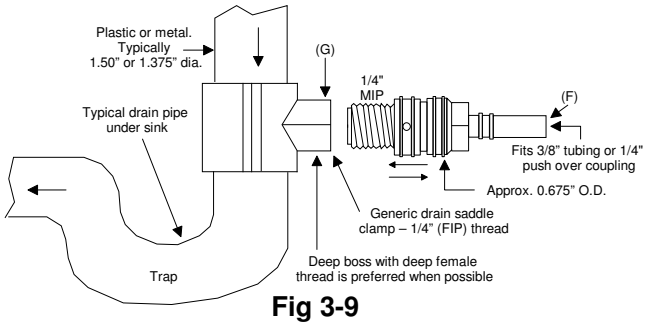

Fig 3-9

(a) The units are required to be open to atmosphere thus unlike most plumbing fittings or back flow devices; these units are not meant to be pressurized. Inability to pressurize these units means limits on flow capacity through the unit.

(b) You must make sure that the flow rate never exceeds the capability of the Air Gap unit to be installed. Frequently, the manufacturer may include tubing or recommend drainpipe size to use with their water treatment equipment. To do a proper installation of the Air Gap unit, the installer needs to know flow rate output of the upstream equipment. If this is unspecified or unknown then usually the flow rate can be measured quickly at the installation site. The flow rate(s) for all conditions and equipment operating modes need to be considered in order to be sure of the worst case conditions.

(c) The Air Gap unit is a gravity flow device. Thus they all need to be installed per the manufacturer's instructions and permanently clamed or affixed into the "down" leg of drain line piping, such that the normal forward stream of water whether forced by upstream pressure or by gravity only, will flow freely past the "Air Gap" opening then continue flowing freely through the outlet piping.

(d) For best Air Gap unit operation, downstream piping and any downstream equipment should present a minimum of resistance or back pressure to the flowing stream of water and this piping should not be smaller than upstream piping. The Air Gap unit maximum flow rate capacity can vary widely. The flow capacity depends on each unique design and on the particular piping installation, the installation site, fittings to be used, water pressure, etc. Please read all applicable enclosed information sheets if unfamiliar with the use, installation and performance of our Air Gap units. Prior to installation, contact the factory if you still have questions. Each installation must place less flow rate demand on unit and the entire backflow system than that stated in the table below.

Always comply with local plumbing codes during installation

1. This Air Gap unit provides only an "AIRGAP" and not a "trap". If no "trap" exists downstream of the unit outlet port; then you will need to install a "trap" downstream of this unit or perhaps choose an alternate more suitable location for installing our Air Gap unit and the drain line piping.
2. For all automatic softeners, filters and other large flow equipment, the model61-S would seem to be a good choice. Our model (31) units are intended for installations with flows noticeably less than (1 gpm). We do Offer several newer, smaller, easy mount units (model 31S, 31-TT, 61-S), Plus complementing accessories. You should become familiar with all those products first, if you are thinking about installing an "RO" drain line Air Gap under a kitchen or bathroom sink or anywhere else. Even if an Air Gap Faucets to be installed, we have drain line accessories that will improve the installation by making it safer, more reliable, much less likely to become contaminated by non potable contents from the actual drain piping at the installation site.
3. Install our Air Gap unit near the drain termination point shown on figures (2-1) thru (2-9). Keep the outlet (downstream) piping as large and as short as possible.
4. You can install the same 3/8" O.D. polyflex tubing at inlet and outlet, but do not reduce piping size at the outlet port or downstream of the outlet port.
5. Inlet or outlet port and "critical level" (C/L) are marked on each Air Gap unit. Install unit with inlet port elevated above outlet port. Install and clamp piping unit so the "C/L" is elevated above the flood level of: the sink, sump, floor drain, floor grate, or standpipe where the downstream piping is terminated. All units must be installed vertically.
6. Always cycle the installed equipment a couple of times thru the full cycle (all possible cycles including fast flush if offered) before leaving each site to be sure of no leaks and proper "Air Gap" performance, including flow capacity.
7. HC Depends on product(s) selected and vertical separation desired by installer and overall elevation available at each installation site. At each installation site, generally the upper boundary is the under side of sink or countertop; the lower boundary usually being the lowest point for installing a drain saddle clamp.

   SP Refers to dimensional separation (spacing) at the noted location. Also depends on installation site, products and tubing lengths chosen by installer. Mat be the same as HC but generally is larger
8. Keep in mind these general guidelines when our products are installed. Usually, the steeper the interconnecting tubing, the greater the flow rate performance.

Performance and Flow Rate Date

Air Gap Unit	
AG110-001 (31-S)	AG110-002 thru -004 (31-S)
.65 G.P.M. 83.2 Oz/Min 2496 ML/Min	.40 G.P.M. 51.2 Oz/Min 1536 ML/Min

GAP CAP™

DUAL SPACE-SAVING AIR GAP DRAIN

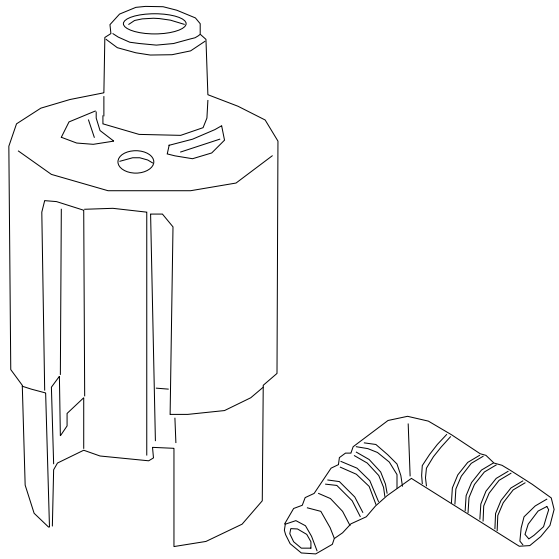

Order #: AG130-001

Part #: 8500

Features

- Ideal space-saving air gap
- Twin inlet port: Larger port is 1/2" slip that also directly accommodates 5/8" O.D. poly tubing. Smaller RO port directly accepts 3/8" O.D.poly tubing.
- Includes inlet elbow with flow straightener (AG170-008).
- Up to 7 G.P.M.
- Fits 1 1/2" & 2", plastic or metal standpipes.

Installation Instructions

Never connect the air gap AG130-001 and the barb fitting (AG170-008) to potable water piping and never directly attach these items to potable water, water treatment equipment.

1. The figures below depict essentially all of the common standpipe installations for the GAP-CAP universal mount Air Gap unit.
2. The universal mount design allows the unit to be conveniently mounted at the top of almost all home or commercial drainage standpipes. The unit is intended to be mounted vertically and fully inserted onto the top of the standpipe. Unlike some other units, it inserts well over an inch over the standpipe to create a secure mounting – but easily removable if desired.
3. The unit is one piece and molded from High Impact Styrene. Normally no glue is ever necessary; however, if installed on PVC or ABS standpipes you should be able to use a suitable PVC or Combination PVC-ABS-Styrene glue to permanently attach the unit to the stand pipe, if so desired. Note: this unit is intended for use only on dedicated standpipes.
4. Unlike some other air gap units, this design offers many options for connecting the inlet ports including the most economical option of using no inlet fitting. Simply cut the 3/8” O.D. and 5/8 O.D. polyethylene tubing square and fully insert into appropriate inlet port. Round the end of the tube if out of round due to cutting. Refer to fig.4 installation and tubing should be clamped as depicted.
5. Unlike all other air gap units, this universal mount design will fit both 1.5” and 2” diameter standpipes and either plastic or metal (either threaded or unthreaded). Note: Poly tubing shown on fig.4 must fit snuggly inside port, and not leak, otherwise use a fitting.
6. A dual inlet barb elbow with flow straightener (AG170-008) can be ordered for installation in the large port which is intended for flows from water softeners and other similar flows. The small inlet port is intended for drip type flows as from an (RO) water system.

Installation Instructions

7. Often the steel pipes have a weld “seam” protruding inside; however, our unit can be rotated so the “seam” falls into the open area of the lower mounting portion – or one could if so desired cut using a hacksaw and remove a small lengthwise segment of the lower mounting skirt. Also four lengthwise “marker” grooves are provided at the bottom outer skirt. If installing unit on a tight (not properly reamed) metal pipe then use a hacksaw and make 2 or 3 slits not more than 3/4” long. Cutting the slits is almost never necessary – just force the unit down until it is seated on its ledge and is vertical.

8. The unit is not intended to support the connecting piping. Conversely, all piping whether rigid as in (PVC) or semi flexible as in (Polyethylene) could provide some support for the GAP-CAP™ unit. Good plumbing practice dictates that all piping should be properly and securely clamped. Securing the connecting piping is the most critical where poly tubing is being used and is inserted directly into the inlet ports. In order to be sure the poly tubing remains fully inserted within the ports; use at least two secure fitting tubing clips on each connecting tubing. Preferably the tubing clips should be no more than about 6” to 8” apart and the first clip should be no more than 12” from the large port and no more than 6” to 8” from the small inlet port. Nylon tubing clips and screws are available from us or are available commercially.

9. When properly installed the GAP-CAP universal mount unit will rest upright and fully seated on its outer ledge or its interior stops, and the connecting piping will add very little weight and no bending or tilting force at the inlet ports.

10. The small “push in” elbow depicted in Fig.2 can be rotated well over 180 degrees and the large dual barb elbow over 360 degrees. In Fig.3 elbow will rotate well over 180 degrees. The unit housing can be rotated as desired during installation.

11. The top vent openings also enable limited visual observation of the unit performance.

12. At barb style ports as shown in Fig.2 we suggest using a suitable clamp over tubing to assure no leakage.

13. Fig.4 shows the basic GAP-CAP unit. Figs. 1, 2, 3 illustrate usage if various purchased fittings.

14. AG170-008 elbow included with Gap Cap.

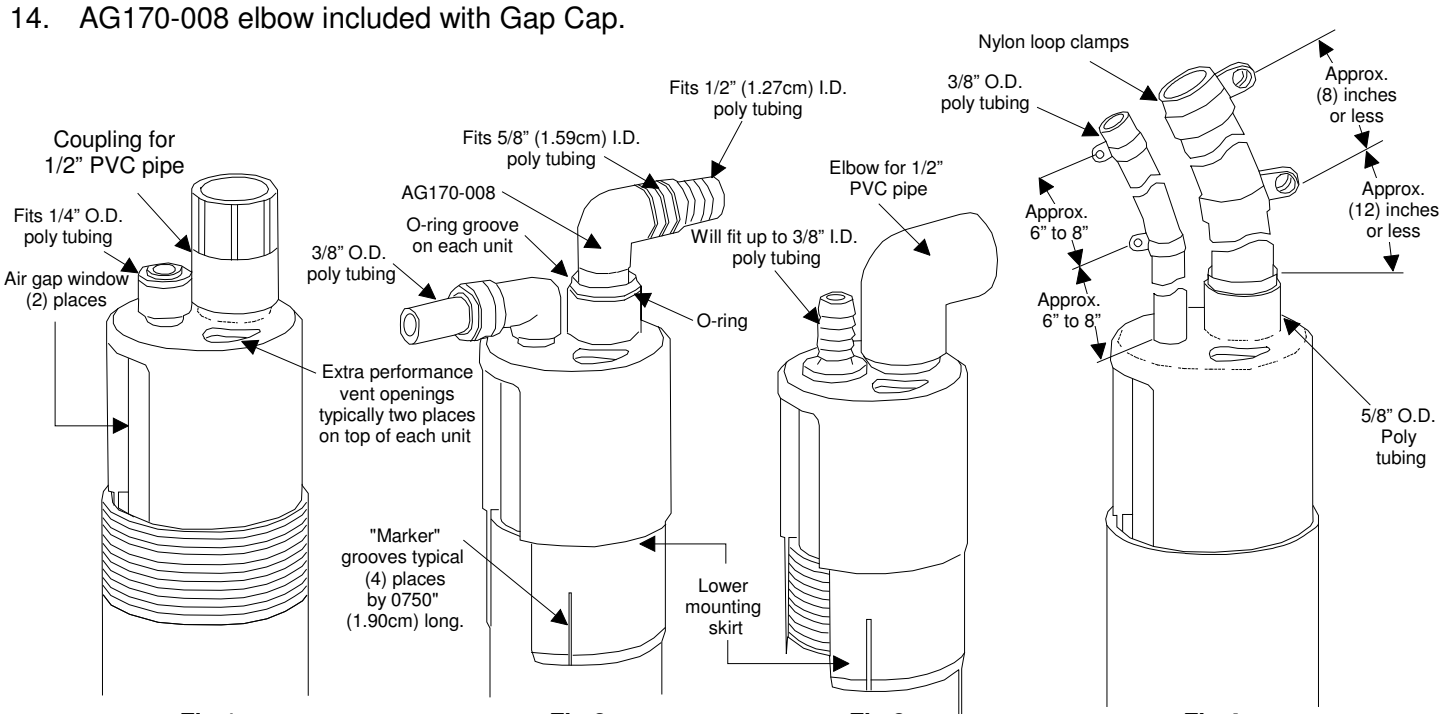

Fig 1
Mounted inside 2” diameter steel standpipe

Fig 2
Mounted over 1.5” diameter PVC or ABS standpipe

Fig 3
Mounted over 1.5” diameter steel standpipe

Fig 4
Mounted inside 2” diameter PVC or ABS standpipe

GAP-IT ™

WASHING MACHINE AIR GAP DRAIN
Model 61-S

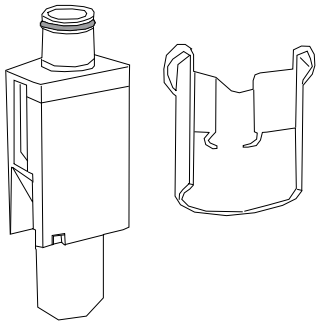

Order #: AG140-001

GAP-IT KIT HF1 WASHING MACHINE AIR GAP DRAIN 2" STAND PIPE

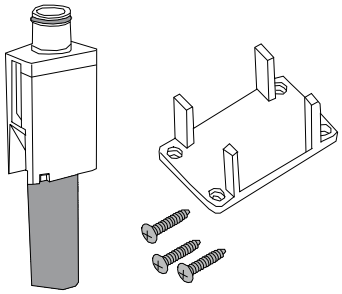

Order #: AG140-002

GAP-IT KIT HF2 WASHING MACHINE AIR GAP DRAIN 1 1/2" STAND PIPE

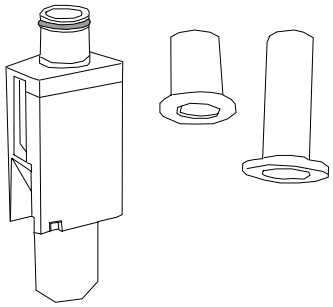

Order #: AG140-003

GAP-IT KIT HF3 WASHING MACHINE AIR GAP DRAIN

Features

- Gap-It primarily designed to fit into recessed washing machine outlet boxes with 2" (Kit HF1) or 1 1/2" (Kit HF2) standpipes. Kit HF1 fits onto top of exposed 2¨ standpipes.
- HF1 unit is 4 1/2¨ (11.43 cm) tall.
- Units feature a flow straightener to quiet and smooth out turbulent flow and splatter shields to eliminate any water droplets that may splatter out of either air gap opening.
- Units designed to allow space for washer drain hook or soft rubber washer hose to share standpipe with Gap-It
- Unit design is lab tested at 15 GPM (56.8 Liters/minute). Recommended usage up to 7 GPM (26.7 Liters/minute).
- Inlet port fits 1/2¨ schedule 40 PVC slip fittings or our AG170-005 and AG170-003 couplings.
- Air gap opening exceeds the code mandated minimum of at least one 1¨ vertical opening.
- HF1 comes with the mounting base for 2" pipe
- HF2 comes with vertical wall mounting bracket and screws.
- HF3 comes with 2 pipe connection sleeves that fit multiple pipe sizes.
- NSF® and UPC® listed

Accessories

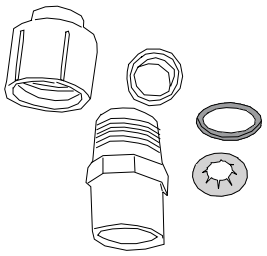

AG170-003

211213S , COUPLING ADAPTER , 1/2" SLIP X 5/8" O.D COMP.FOR AG200 SERIES/AG100 /AG150 SERIES INLET CONNECTION

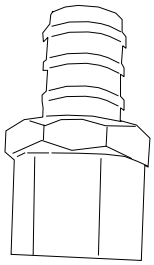

AG170-005

51024, WHITE 5/8" ID INSERT BARB X 1/2" PVC SLIP FOR AG 100 SERIES INLET PORT

Installation Guidelines

Maximum allowable flow rates:
Kit HF1 or HF2 (6.50 GMP), Kit LFS or LFS (0.40 GMP), (Kit LFS or LFE)* plus one each model 71 & 81 (0.20 GMP).
Results and performance varies. Plan to be conservative.
*flow rates even smaller if using Air Gap faucet.

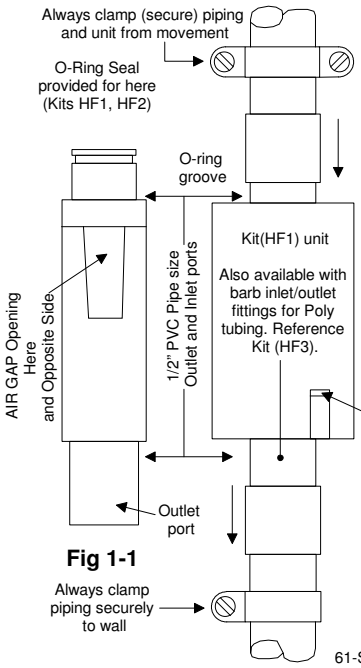

Fig 1-1

Fig 1-2

If O-Ring is supplied and not actually installed on part, then install O-ring in O-ring groove as noted in fig. 1-1

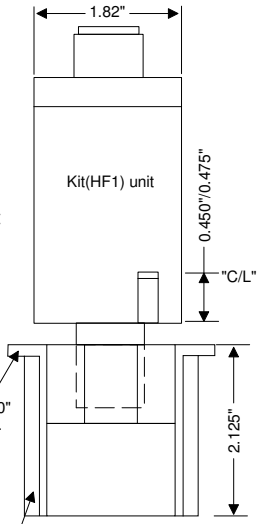

Fig 1-3

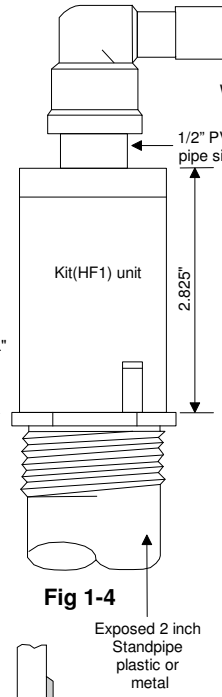

Fig 1-4

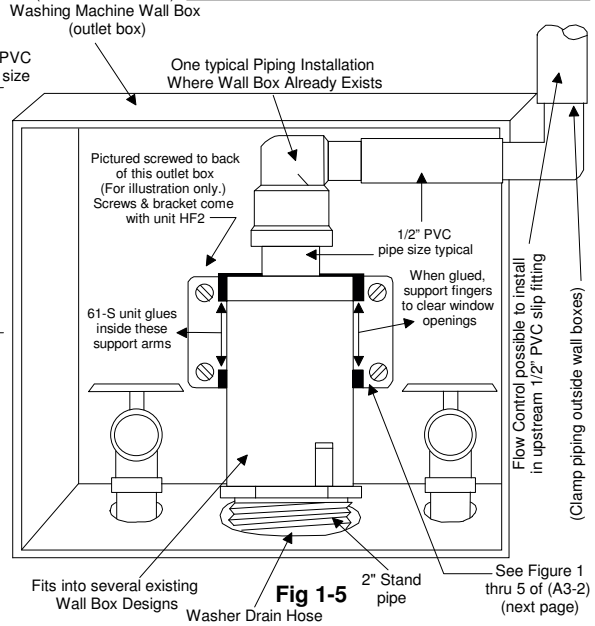

Fig 1-5

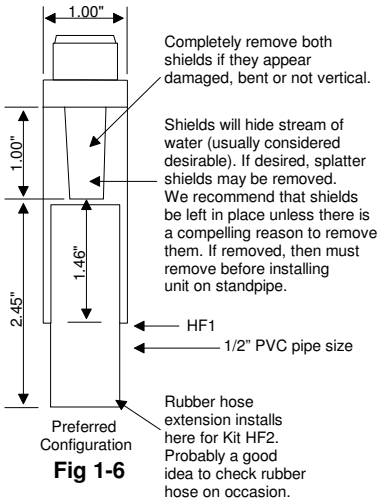

Fig 1-6

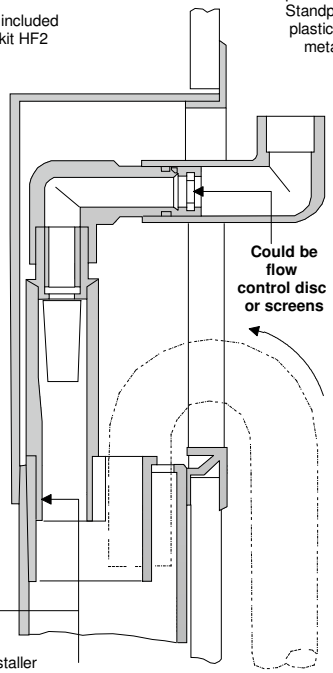

Fig 1-8

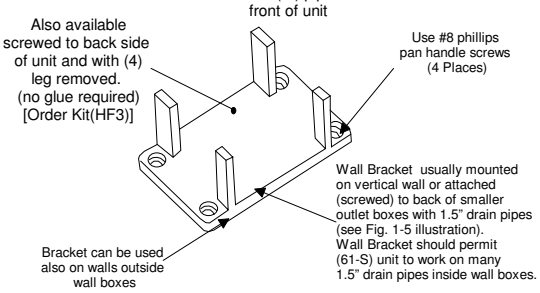

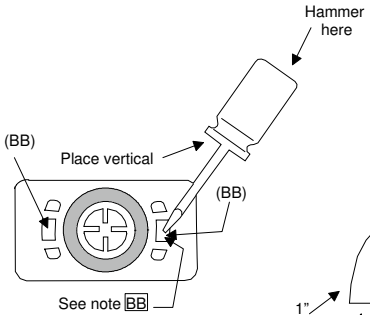

Fig 1-7

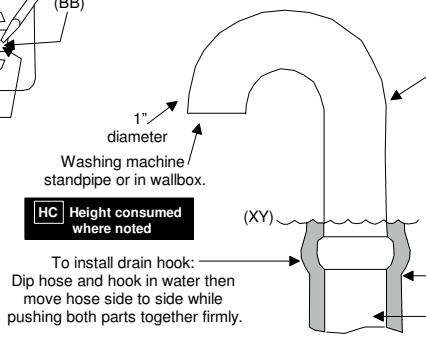

Fig 1-9

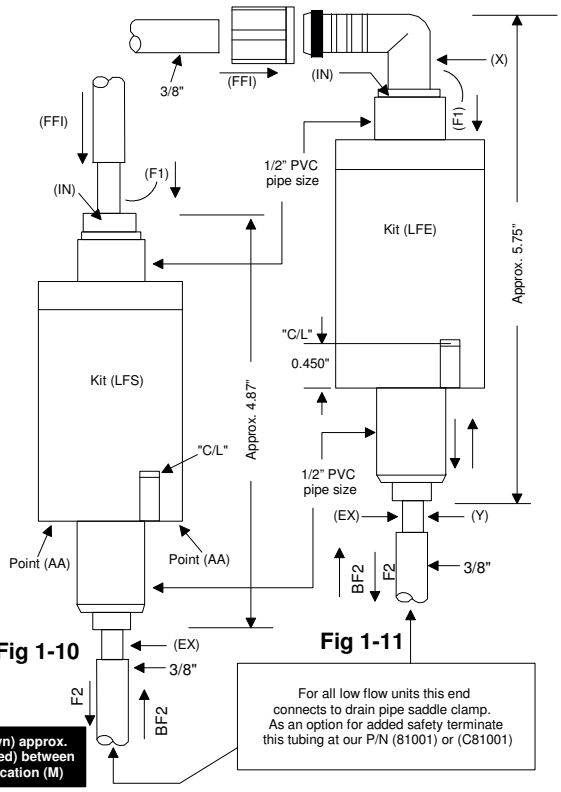

Fig 1-10

Fig 1-11

Installation Guidelines

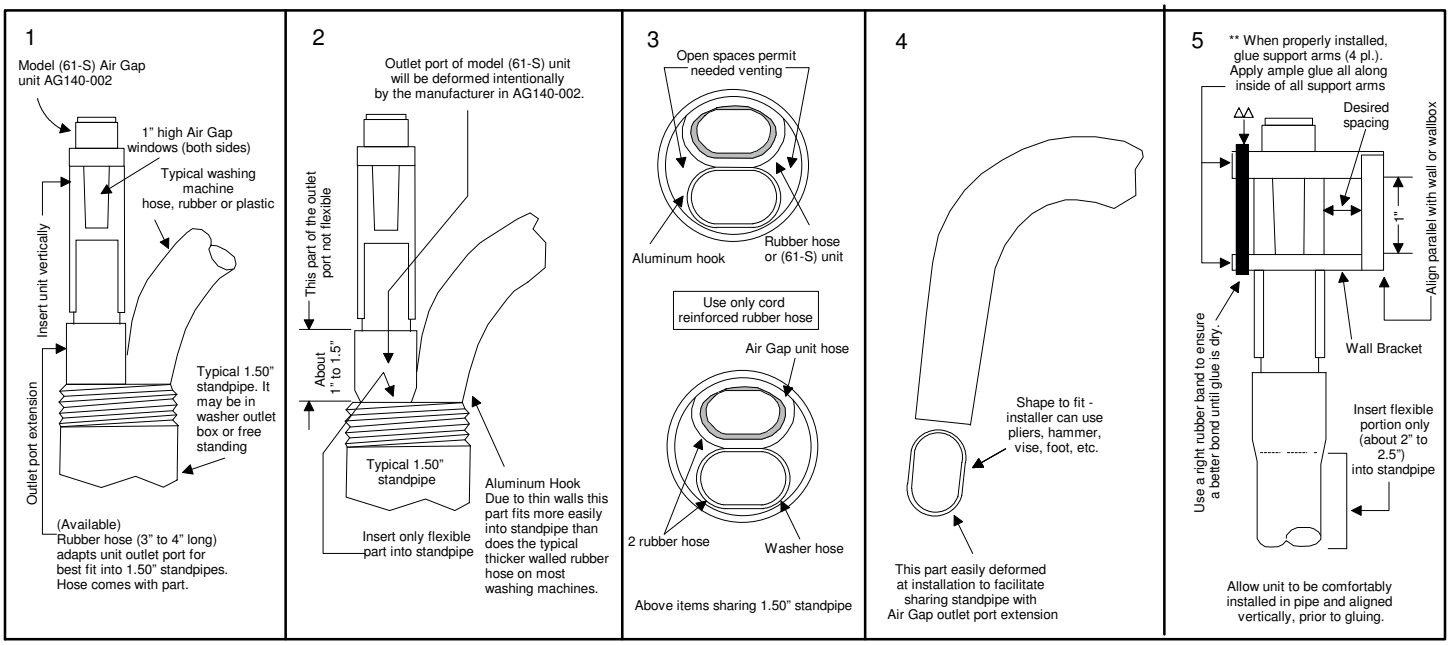

** Glue unit into the four arms of wall bracket – using combination ABS/PVC/CPVC glue for best results. ABS glue should work but glue joint will not be as strong. When installed there should be minimum mechanical stress on unit and bracket. Primary purpose of wall bracket is to secure unit in vertical position and at correct spacing from the back wall. Use tight or double rubber band (Fig. 5) to squeeze arms together, for good glue joints. Allow time for glue joints to dry. (Usually at least 15-20 minutes and preferably longer if possible).

△△ For even easier gluing, newest wall bracket has a design feature causing the four support arms to apply more squeeze pressure to the side if the Air Gap unit. Tighten four mounting screws until bracket is just snug against support wall. Now, varying screw tightness will cause more or less squeeze on unit. Within the adjustment range, generally a tight squeeze is preferable.

AP Aluminum drain hook – separate purchase item. Available commercially or from us (P/N 34709). If used, then cut off end (hook portion of rubber hose) first, then next insert rubber hose up to about (xy) as shown on reverse side.

BB To remove shields: provide solid support at points (AA) with unit vertical as in (Fig. 1-10). Place medium blade screwdriver vertically at location (BB) as in (Fig. 1-7). With hammer, tap screwdriver once or twice using light to medium tap. Shield should break free and fall out the bottom port and can be removed.

Installation Guidelines

(a) The units are required to be open to atmosphere thus unlike most plumbing fittings or back flow devices; these units are not meant to be pressurized. Inability to pressurize these units means limits on flow capacity through the unit.

(b) You must make sure that the flow rate never exceeds the capability of the Air Gap unit to be installed. Frequently, the manufacturer may include tubing or recommend drainpipe size to use with their water treatment equipment. To do a proper installation of the Air Gap unit, the installer needs to know flow rate output of the upstream equipment. If this is unspecified or unknown then usually the flow rate can be measured quickly at the installation site. The flow rate(s) for all conditions and equipment operating modes need to be considered in order to be sure of the worst case conditions. Study all of the accompanying literature.

(c) The Air Gap unit is a gravity flow device. Thus they all need to be installed per the manufacturer's instructions and permanently clamed or affixed into the "down" leg of drain line piping, such that the normal forward stream of water whether forced by upstream pressure or by gravity only, will flow freely past the "Air Gap" opening then continue flowing freely through the outlet piping.

(d) For best Air Gap unit operation, downstream piping and any downstream equipment should present a minimum of resistance or back pressure to the flowing stream of water and this piping should not be smaller than upstream piping. The Air Gap unit maximum flow rate capacity can vary widely. The flow capacity depends on each unique design and on the particular piping installation, the installation site, fittings to be used, water pressure, etc. Please read all applicable enclosed information sheets if unfamiliar with the use, installation and performance of our Air Gap units. Prior to installation, contact the factory if you still have questions. Each installation must place less flow rate demand on unit and total system than that started at the top of addendum (A3-1)

Always comply with local plumbing codes during installation

1. This Air Gap unit provides only an "AIR GAP" and not a "trap". If "trap" exists downstream of the unit outlet port, then you will need to install a "trap" downstream of this unit, or perhaps choose an alternate more suitable location for installing our Air Gap unit and the drain line piping.

2. For all automatic softeners, filters and other large flows equipment, the GAP-IT model would seem to be a good choice. You should become familiar with all of our products first, if you are thinking about installing an "RO" drain line Air Gap under a kitchen or bathroom sink or anywhere else. Even if an Air Gap Faucet is to be installed, we have drain line accessories that will improve the installation by making it safer, more reliable, much less likely to become contaminated by non potable contents from the actual drain piping at the installation site.

3. Install our Air Gap unit near the drain termination point. Keep the outlet (downstream) piping as large and as short as possible.

4. Do not reduce piping size at the outlet port or downstream of the outlet port.

5. Inlet or outlet port and "critical level" (C/L) are marked on each Air Gap unit. Install unit with inlet port elevated above outlet port. Install and clamp piping and unit so the "C/L" is elevated above the flood level of: the sink, sump, floor drain, floor grate or standpipe where the downstream piping is terminated.
   All units must be installed vertically.

6. Always cycle the installed equipment a couple of times thru the full cycle (all possible cycles including fast flush if offered) before leaving each site to be sure of no leaks and proper "Air Gap" performance, (including flow capacity). [For flows too large for our various high flow units, then fabricate a safe and fully functional "Air Gap" using proper design and materials, with suitable pipe and fittings.]

GAP-A-FLO™

INLINE AIR GAP DRAIN

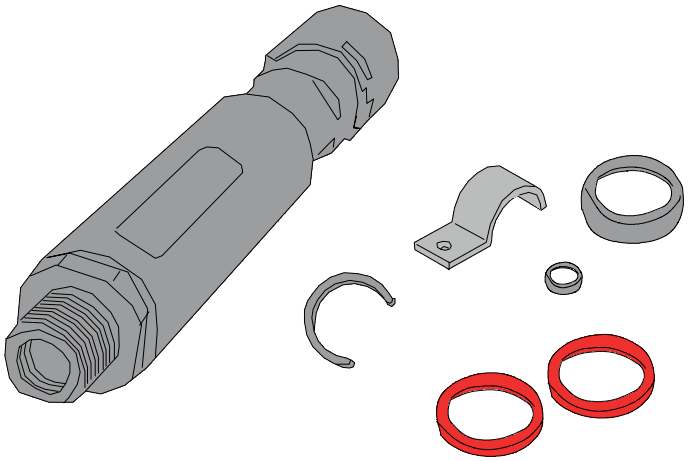

Order #: AG150-001

Part #: 211211

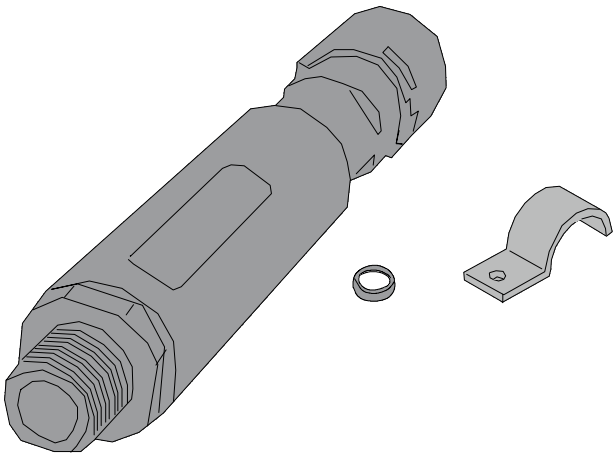

Order #: AG150-002

Part #: 211212

Features

- Provides an in-line air gap, usually installed in the last 5 feet (1.5 meters) of the indirect drain piping and must be in the down leg of the drain line piping
- Unit can be tilted at any angle (down as low as 45° angle) when installing if needed, keeping window opening on top side.
- Molded clamp groove plus included "Jiffy Clip" enable easy vertical wall mounting as noted in first 2 figures
- Unique design incorporates a rotatable splash guard/splatter shield, to eliminate splatter of water droplets out of either air gap opening
- Unit approximately 8¨ (20.32 cm) long
- Unit design lab tested at 15 G.P.M. (56.8 Liters/minute). Recommended usage is up to 7 G.P.M. (3.7 to 26.5 Liters/minute)
- All noted threads are American NPT threads
- Use the 1/4¨ F.I.P. threads only with injector washer (included in kit) and with flow rates less than 1 G.P.M. (3.8 liters/minute). Injector washer should be fully seated in top of unit. Push washer down using a wooden pencil or similar object.
- Inlet port also fits our AG170-005 or AG170-004 couplings.
- Air gap opening exceed the code mandated minimum of 1¨ vertical spacing.
- NSF® and UPC® listed

Installation Guidelines

Note: the most important things to remember when installing these “Air Gap” units:

(a) The units are open to atmosphere thus unlike most plumbing fittings or backflow devices; these units cannot be pressurized.

(b) We presume that upstream piping has sufficient internal pressure to deliver water to the inlet port. The upstream piping can vary as to size and length and this piping generally has very little effect on the performance of these units. Softener manufacturer usually specifies 1/2” I.D. piping.

(c) The unit is a gravity flow device. Thus they need to be installed per the manufacturer’s instructions and permanently clamed or affixed into the “down” leg of drain line piping, such that the stream of water whether forced by upstream pressure, or by gravity only, will flow freely past the “Air Gap” then continue flowing freely through the attached downstream piping.

(d) For proper unit operation, downstream piping should present a minimum of resistance or back pressure to the flowing stream of water and this piping must not be smaller than upstream piping. Unit max. flow rates can vary widely. They depend primarily on each unique piping installation.

Installation Instructions

(Always comply with local plumbing codes during installation).

1. Compression coupling AG170-004 is recommended. It adapts 5/8” O.D. piping (polyflex, quest or rigid copper) to the inlet port of Gap-a-flo unit. (Also, inlet port is 1/2”MIP and 1/4”FIP threads; outlet port is 3/4” MIP and 3/8” FIP threads)
2. Gap-a-flo unit AG150-001 includes outlet port compression coupling for 5/8” O.D. polyflex or quest piping. If you prefer, you may discard this bottom compression nut and pipe directly to the bottom threaded port.
3. This unit provides only an AIR GAP and not a trap. If no trap exists downstream of the outlet piping termination then you will need to fabricate a trap downstream of this unit. Downstream piping should make an indirect and not a direct hard connection to the house drain/waste piping. (see fig. 7).
4. For all automatic softeners, filters and other large flow devices: never use the small black “flow centering” washer and never use the female threads on the Gap-a-flo unit. The smaller internal threads are intended for many “RO” equipment installations with flows less than (1 GMP).
5. Install unit close as possible to the drain termination point. Keep the outlet (downstream) piping as large and as short as possible and try to avoid elbow fittings. For AG150-001, even with an idea installation, the suggested maximum flow rate of is 7 GMP.
6. You can install the same size 5/8” O.D. polyflex piping at inlet and outlet of the unit or you can use larger piping at the outlet. Never install smaller piping at the outlet. Units AG150-002 are available with larger internal bore at the outlet port. Connection to outlet port then is via the 3/4” MIP thread. For AG150-002 units the suggested maximum flow rate is about 8 GPM.
7. Inlet port and “critical level” (C/L) are marked on each unit. Install unit with inlet port elevated above outlet port. Unit can be oriented anyway between 45° and vertical. Install and clamp piping and unit so the “C/L” is elevated one inch or more above the flood level of: the sink, sump, floor drain, floor grate or standpipe where the downstream piping is terminated.
8. Always cycle the installed equipment a couple of times thru the full cycle before completing installation to be sure of no leaks and proper Air Gap performance. For larger flows use (2) units in parallel.

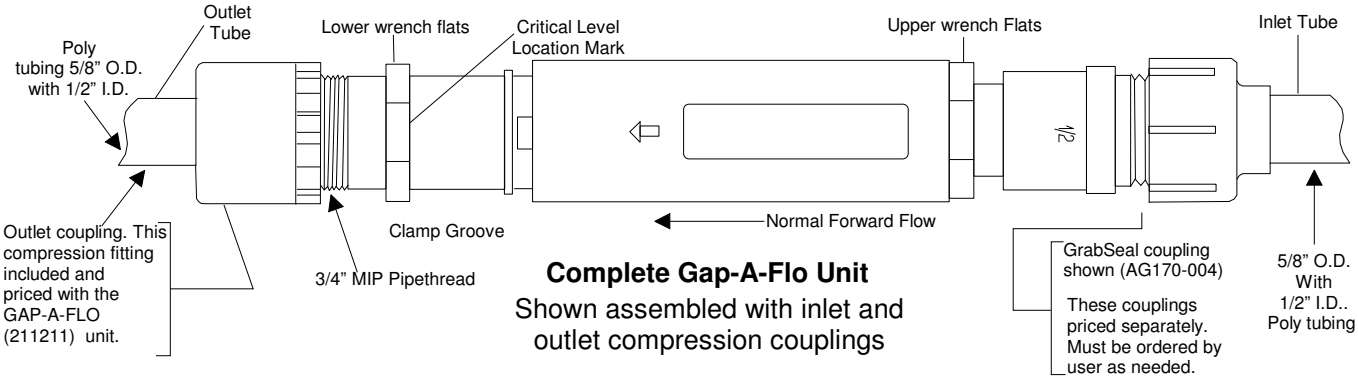

Complete Gap-A-Flo Unit
Shown assembled with inlet and outlet compression couplings

Correct Assembly – GrabSeal Compression Coupling

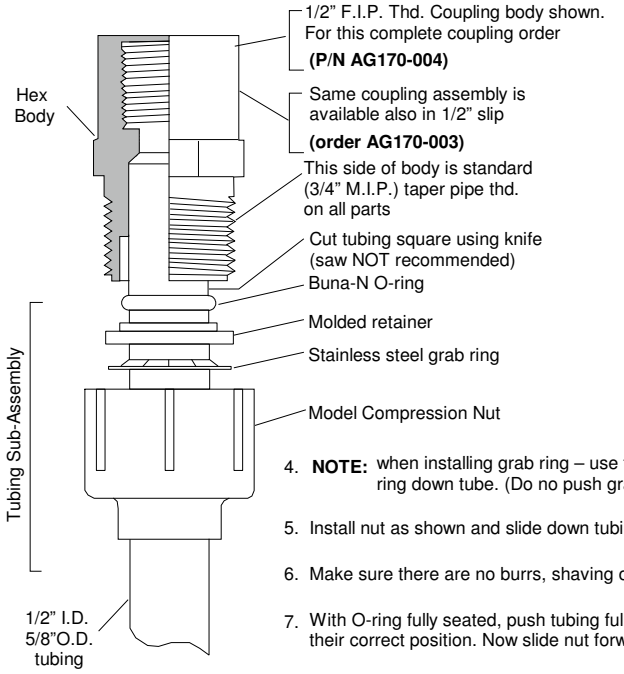

Also available complete with 1/2" barb insert body as pictured below order **(P/N AG170-006)**

NOTES:

- See current Air Gap International price sheet for prices and details of complete GrabSeal Coupling and/or available replacement parts. (Not all parts are available as replacement.)
- Use only the grab ring furnished by us with these coupling. Use of any other grab ring is not recommended.

ASSEMBLY INSTRUCTIONS:

1. Correct orientation of parts is shown at left. Use only original or spare parts furnished by us with these couplings.
2. When tightening nut, usually firm hand pressure is all that is required (pipe wrenches or pliers not recommended)
3. Do not bend or distort the stainless grab ring when installing.
4. **NOTE:** when installing grab ring – use the plastic retainer oriented as shown to insert the grab ring over end of tube and then to push grab ring down tube. (Do no push grab ring too far down tube – only about 3/8" to 1/2" down tube.)
5. Install nut as shown and slide down tubing. Next install grab ring, along with plastic retainer and finally the O-ring onto the 5/8" O.D. tubing.
6. Make sure there are no burrs, shaving or debris in the O-ring socket. Wetting O-ring and socket will help to sully seat the O-ring in socket.
7. With O-ring fully seated, push tubing fully forward into its socket. This will then cause retainer and grab ring to slide down tube and into their correct position. Now slide nut forward and tighten.

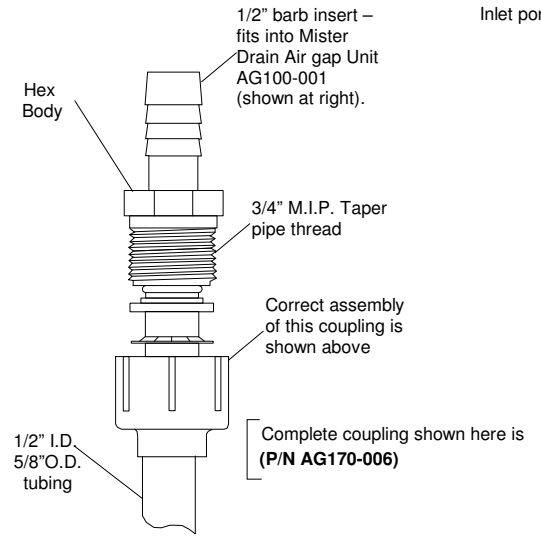

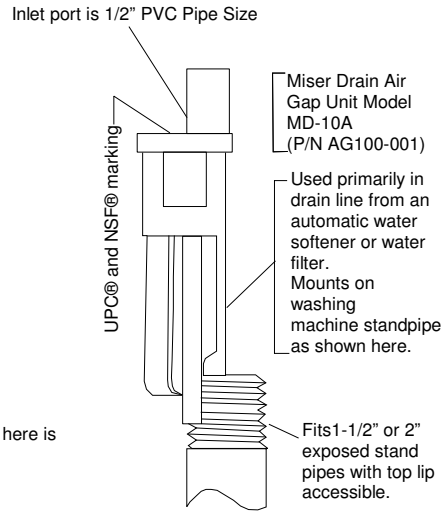

Use "Gap-A-Flo" Air Gap Unit if your drain line does not terminate into open and exposed upper end of stand pipe as pictured above.

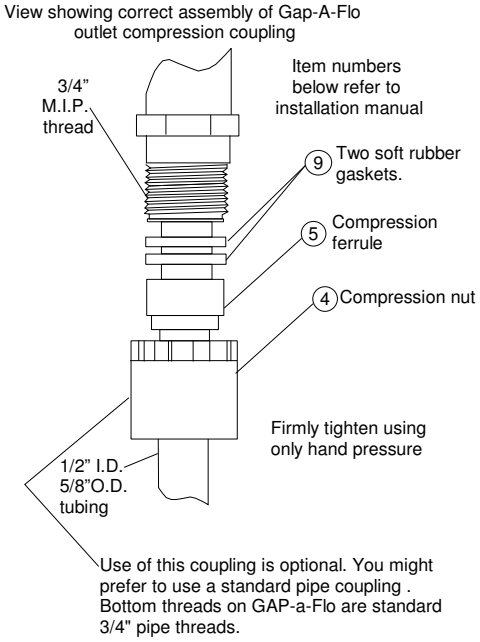

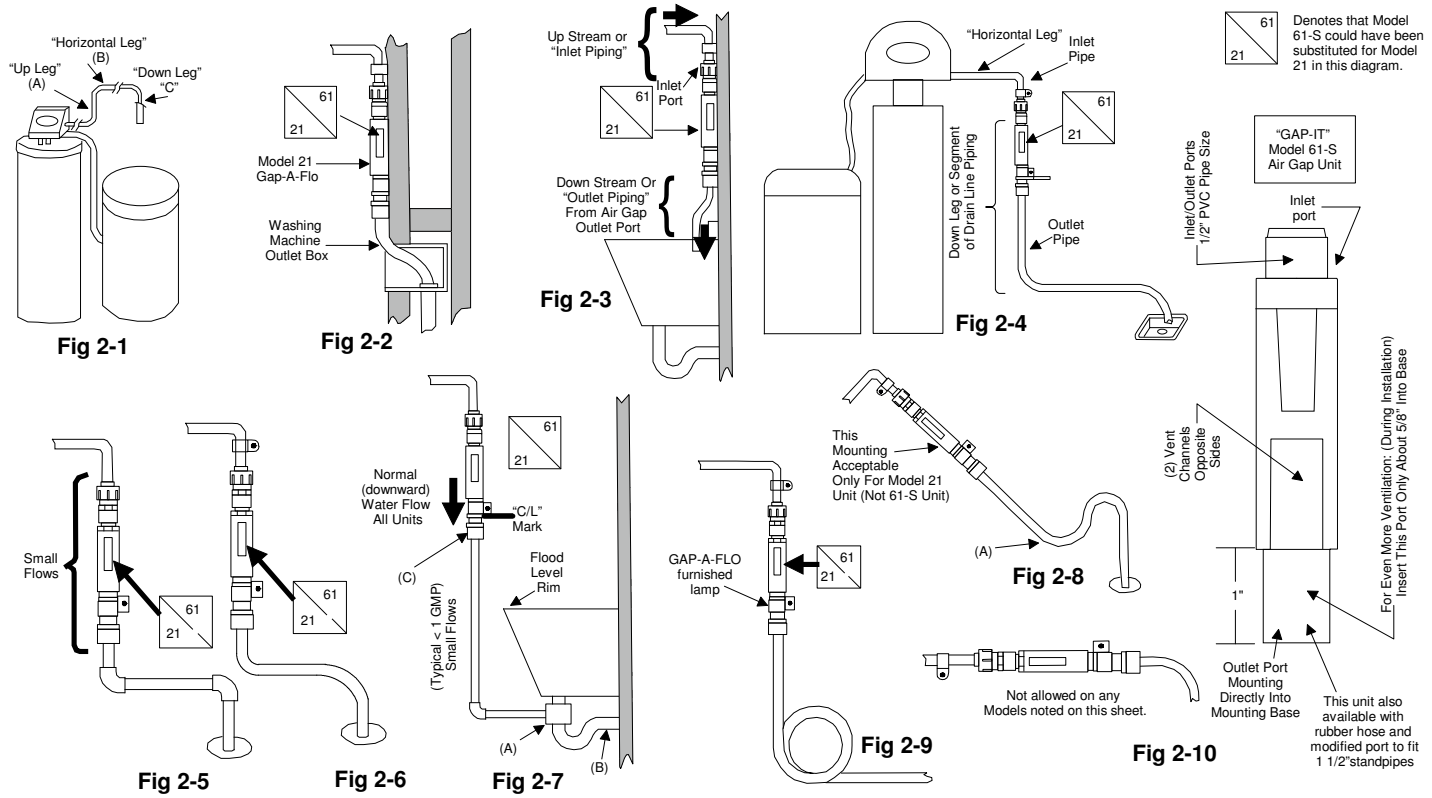

The figures above represent many of the installation situations typically encountered by the water conditioning equipment installer. These figures together with the following expectations are intended primarily to acquaint the first time customer and/or installer with the proper use and installation of these "AIR GAP" units. If you are having problems with our product functioning properly or have other questions, then contact your supplier and/or installer or the factory. Additional technical information is available by ordering "GAP-A-FLO", Installation and Service Manual (P/N 2110113), or other pertinent data.

Do the Following when installing model 21, 31, 61 AIR GAP Units:

1. Read all instructions carefully before starting the installation if you are not familiar with our AIR GAP Products.
2. Comply with all local pluming codes.
3. Properly secure unit as well as the inlet and outlet piping. Be sure to cycle the upstream equipment thoroughly to confirm no system leaks and proper Air Gap unit performance before leaving the installation site.

(*)4. When tightening "GAP-A-FLO" threads: use the upper wrench flats to hold the units while making the inlet connection. Similarly, use the low wrench flats while making the outlet connection.

5. At all times fluid must be able to flow freely through the Air Gap unit and the attached outlet (downstream) piping. Therefore the outlet piping should be kept as short as possible (generally 2 or 3 feet or less) and as free flowing as possible.

(*) (For water softeners and filters (large flows) always use the supplied 5/8" O.D. outlet compression fitting – or if you prefer, the 3/4" MIP outlet thread. The 3/8" FIP outlet thread is intended only for very small flows such as from and "RO" unit.)

6. Always install our unit upstream of a trap. These Air Gap units provide only an Air Gap and not a trap.
7. Generally: Outlet pipe size and length is determined by this unit. Inlet pipe size, length and height is determined by the installation site and the water conditioner manufacturer recommendations. (Also see item 7 below.)
8. Install Model 21 vertically (Fig. 4) or at 45° (Fig. 8) or at some angle between 45° and vertical – always with the inlet elevated above the outlet port. (All model 31-S, 31-TT and 61-S must be installed vertically).
9. Install all units in the "down leg" of the drain line piping. (Typically Figs. 2 thru 9 or Fig. 1, C above.)
10. If making a direct connection as in Fig. 7, then be sure that the AIR GAP unit is properly mounted and secured. The "C/L" mark must be elevated one inch or more above the maximum possible backflow water flood level.
11. Ref. Figs. 2, 3 – Note in all cases a trap is down stream of our unit. NOTE also in these situations that the outlet piping is short, has no elbows and presents to our unit a rapid decrease in elevation thus proving good/quick drainage through the outlet piping. Generally this represents an ideal situation. (Typical for large flows.)
12. Always use Teflon tape on all molded plastic threads and use extra caution so as not to over tighten or damage the threads, particularly female threads. Use caution when connecting to barb fitting ports of model 31 and 61-S units

DON'T do the following when installing model 21, 31, 61 Air Gap units:

1. Never install in the "up leg" (Fig. 1 point A) or horizontal leg (Fig. 1, point B or Fig. 10) of the drain line piping.
2. Never install such that the inlet port is less than 45° above the outlet port (Fig. 8 depicts 45° mounting)
3. Avoid long horizontal piping in the outlet piping (Fig.4 or Fig. 5); minimizing elbows in outlet piping (Fig.5); avoid any severe turns or elevation of outlet piping such as Figs. 6, 8 or 9. (Water flow in outlet piping should not be restricted by severe turns or elevation increase, (2-8) particularly if large flows are involved as from a softener.)
4. Generally, never make a hard connection or direct connection between our unit and the house drain/waste piping. NOTE: no direct connections in Figs. 2, 3, 4, 5, 6, 8. Note that there is a direct connection Fig. 7 at point (A). This is OK for smaller flows (generally less than 1 GMP) as from "RO" units, so long as unit "C/L" (after mounting unit) is above the sink top rim (flood level) and/or above the maximum possible "back flow" water flood level (spill level).
5. Never connect downstream of a trap (Fig. 7, Point B) unless a new trap is provided in the new piping line between the connections at locations (C) and (B).
6. Do not use the small flat injector washer (item 7 of #2110113) for water softener or filter installations; only use for small flows such as small "RO" units or systems.
7. Outlet piping should never be smaller than inlet piping and must be installed so as to easily handle the maximum fluid flowing thru the Air Gap unit. When inlet flow stops, the installation should allow unit to drain freely and completely within 5 seconds. Don't install units where they will be subject to freezing or severe weather.

Drain Boa™

1 1/2" DRAIN COUPLING 3/8 POLY TUBE

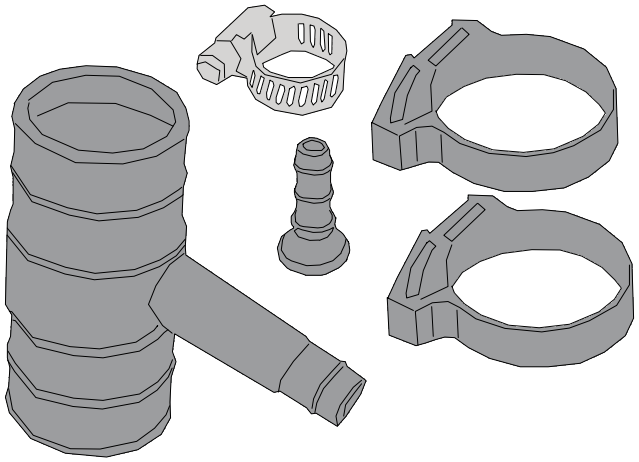

Features

- Inlet port directly accepts 3/8¨ and 1/2¨ O.D. poly tubing.
- Dual plumbing code listed sink tailpiece fitting.
- Comes with 2 plastic clamps and a stainless steel screw drive clamp as shown.
- NSF® and UPC® listed.

Order #: AG160-001

Part #: DC9700

INSTALLATION INFORMATION AND INSTRUCTIONS

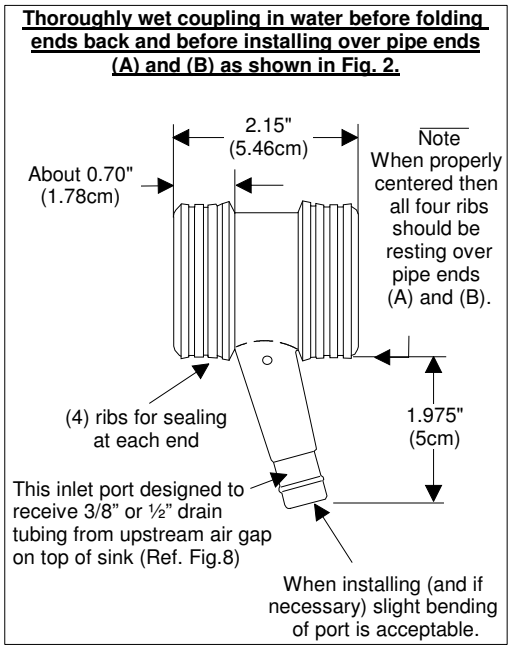

Fig. 1
Drain-Boa Rubber Coupling folded back on itself at each end and ready to be installed in the kitchen sink tailpiece

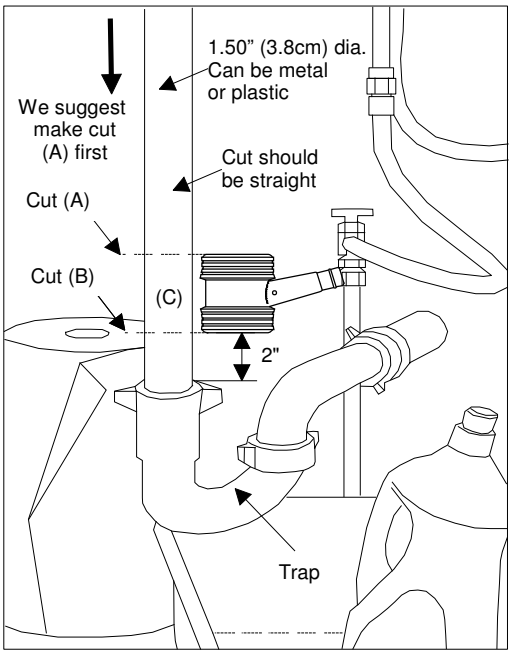

Fig. 2
Typical view under kitchen sink with 1.5" dia. Plastic tailpiece and sink trap.

Installation Instructions

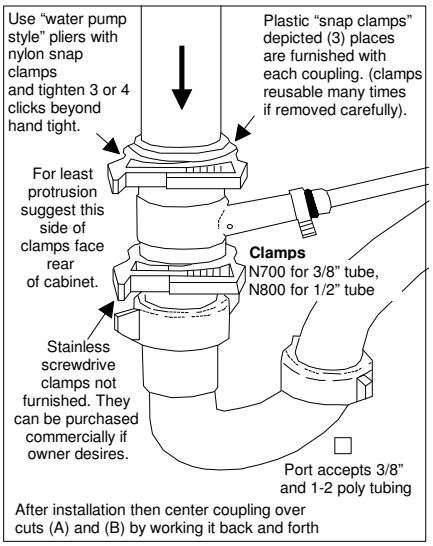

Fig. 3
Rear view of large plastic clamps after installing the Drain-BOA Rubber Coupling

Polyethylene drain tubing from air gap properly inserted to inner stop and clamped.

Wet tubing only with water before installation

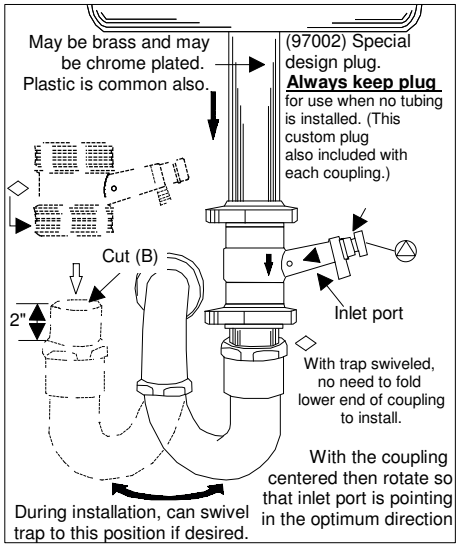

Fig. 4
Depicts metal 1.5" kitchen sink tailpiece with Drain-BOA properly installed.

Solid plug depicted here in lieu of the typical 3/8" O.D. Polyethylene tubing as if the "R.O." system has been removed. Solid plug must be installed at all times when tubing is not installed.

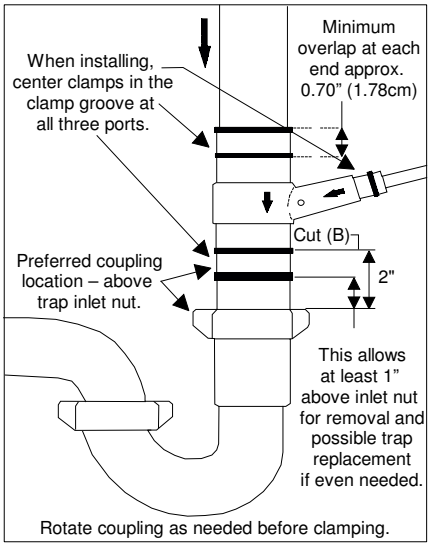

Fig. 5
This coupling depicted before the clamps are installed.

If large stainless screw drive clamps are used (Fig.6), their width must be 0.50"

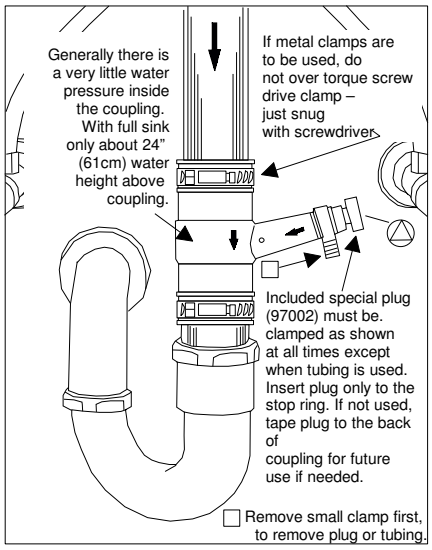

Fig. 6
Depicts Drain-BOA coupling installed with stainless steel screwdrive clamps on the large ports.

Either tubing or solid plug must be installed at all times, otherwise leakage will occur out this port.

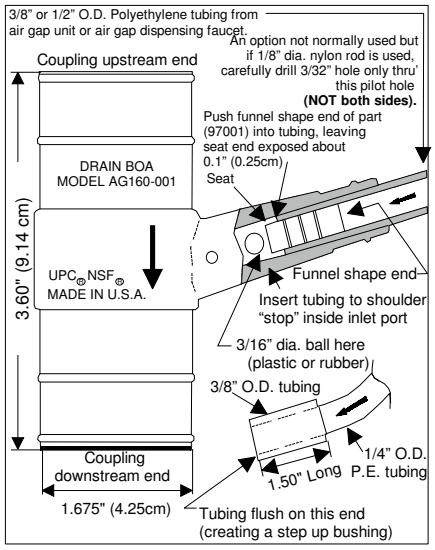

Fig. 7
Depicts certain dimensions and marking Cut 3/8" or 1/2" poly tubing square and wet only with water before inserting to "stop".

Above figure shows partial cutaway of inlet port for illustration purposes. Nylon rod, ball and seat may be a possible option later.

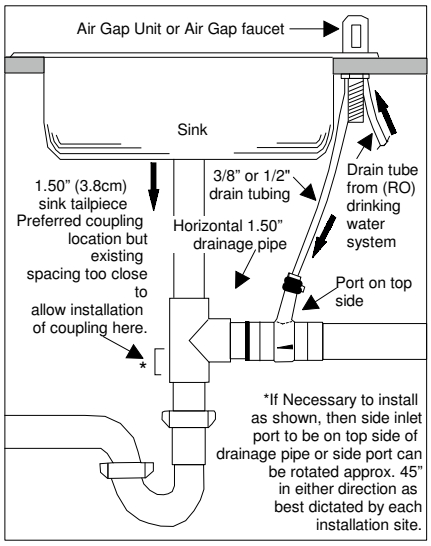

Fig. 8
Depicts Drain-BOA coupling installed in a horizontal branch below kitchen sink, due to space limitations at the preferred installation site.

Always install unit according to flow arrows.

This coupling is never to be installed in potable water piping and never directly attached to potable water or potable water valves or potable water plumbing fittings.

Amerigap™

DISHWASHER TWIN, EXTRA LONG THREAD DRAIN AIR GAP

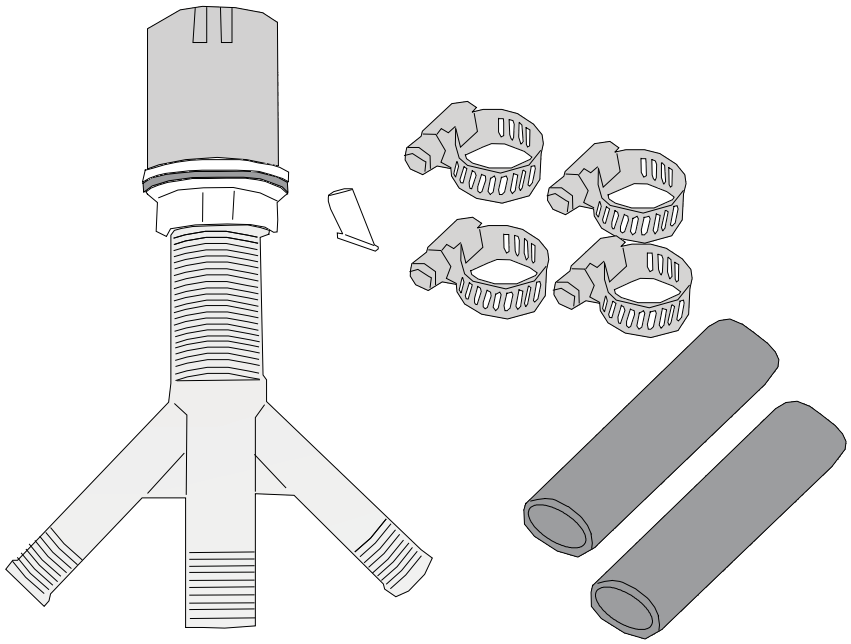

Order #: AG200-001

Part #: T52

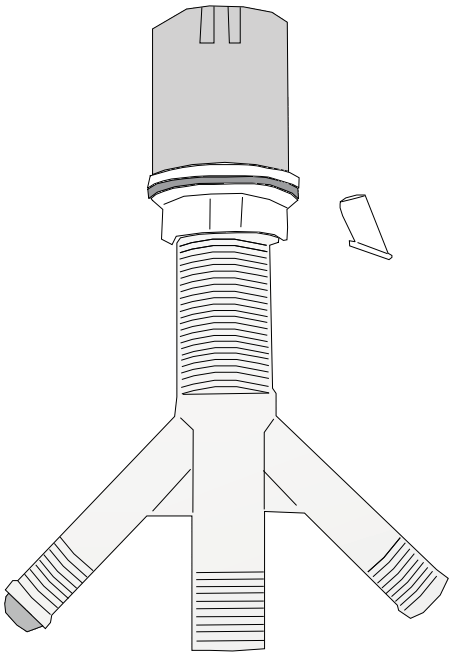

Order #: AG200-002

Part #: T52 RO

Features

- AG200-001 twin inlet ports accept dishwasher inlet hose (5/8¨ I.D.). Outlet port accepts standard 7/8¨ I.D. garbage disposal hose
- AG200-002 kit. One inlet port accepts standard dishwasher hose (5/8¨ I.D.). Other small flow inlet port comes with quick connect "John Guest" type fitting that accepts 1/4¨ O.D. poly tubing from an undersink RO unit eliminating the need for an RO airgap faucet
- AG200-003 unit accepts standard dishwasher inlet hose (5/8¨ I.D.). Outlet port accepts 7/8¨ I.D. garbage disposal hose
- Extra long threads for mounting through thicker counter tops
- NSF® and UPC® listed

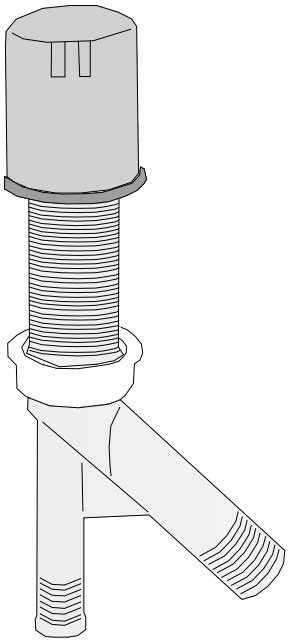

Order #: AG200-003

Part #: 52

Twin Inlet Dishwasher Air-Gap

Connect outlet hose to Air-Gap unit with hose clamp and leave other end loose. Connect inlet hose to Air-Gap unit, use either inlet port 1 or 2. Connect the second inlet port also whenever any second upstream equipment needs to drain through a downstream Air-Gap. Included plug fits into the top end of either unused port. It must be installed prior to use of this unit when only one inlet port is to be connected.

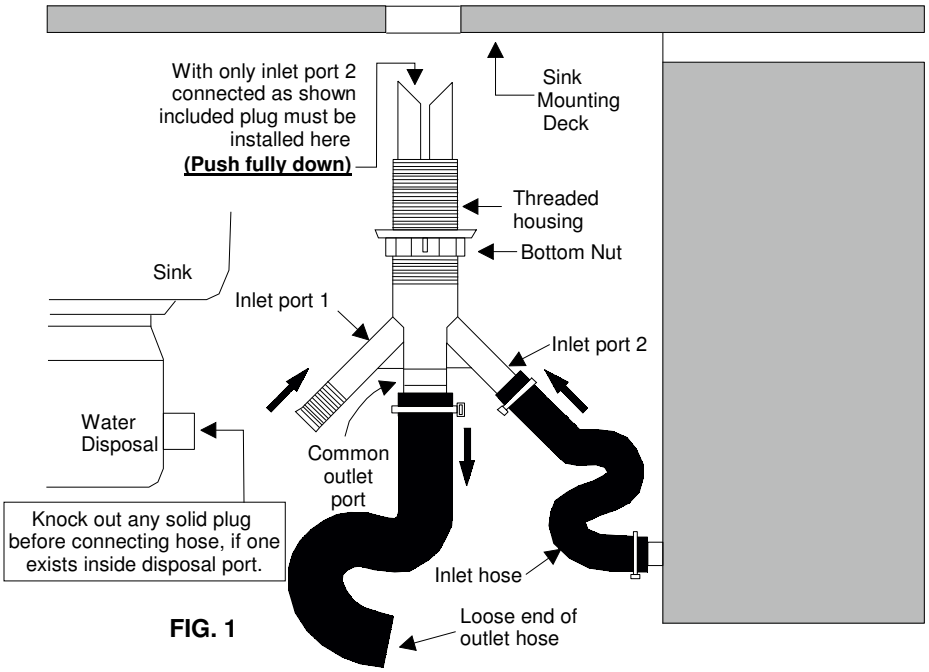

FIG. 1

Loosen bottom nut (see Fig.1) then push Air-Gap threaded housing up through hole in sink deck as shown in Fig.2. Hole size should be standard 1-3/8" diameter. Install rubber washer over top of threaded housing. Now install the top housing by pushing down and carefully rotate housing until the housing "key" engages fully down into the closest "keyway" in the threaded housing. Install top nut over housing and screw fully down hand tight. Now fully tighten Air-Gap housing using the bottom nut.

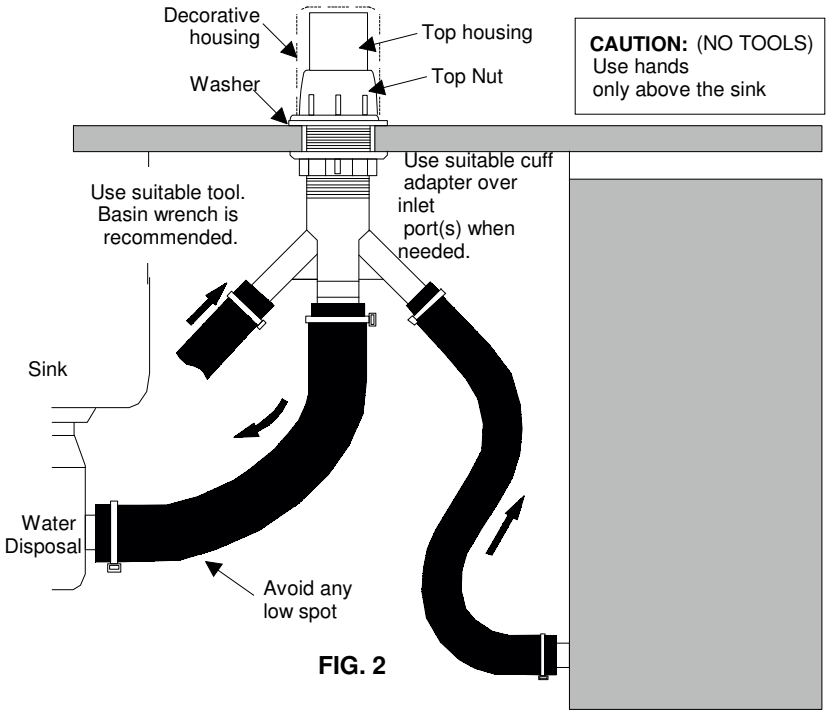

FIG. 2

NEVER INSTALL THE TOP HOUSING IN "B" SLOT.

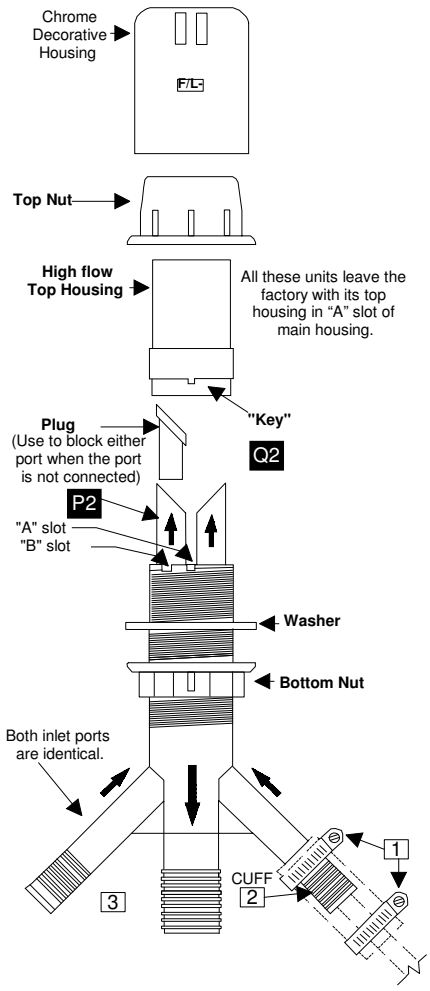

1. Stainless screw drive clamps. 2 required on each port.
2. 5/8" I.D. rubber tubing cuff long.
3. Tubing for outlet not furnished. Use existing tubing and clamps or purchase at local supply store (7/8" I.D. waste disposal tubing.)
4. Fully insert the dishwasher drain tubing leave about 1 1/8" of cuff to push over the inlet port.

Use existing hose or new outlet hose can be cut to the exact length needed at each installation but use care not to pinch or partly collapse outlet hose.

Connect Air-Gap outlet hose to dishwasher branch inlet or to the disposal inlet as shown here. Push decorative housing fully down over top housing with vent slots on the backside.

Accessories

Fittings & Couplings

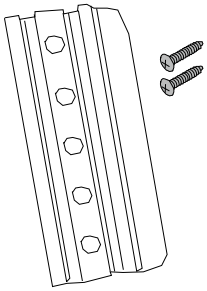

Order #: AG170-001

31-S KIT S-B , COOLER AIR GAP KIT

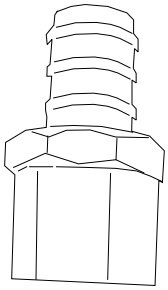

Order #: AG170-002

51023,COUPLING , 5/8 " I.D. INSERT BARB X 1/2" F NPT THREAD,FOR AG150 SERIES INLET CONNECTION

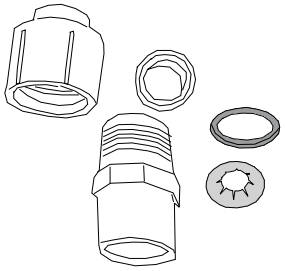

Order #: AG170-003

211213S , COUPLING ADAPTER , 1/2" SLIP X 5/8" O.D COMP.FOR AG200 SERIES/AG100 /AG150 SERIES INLET CONNECTION

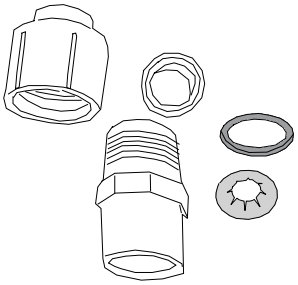

Order #: AG170-004

211213, COUPLING ADAPTER , 1/2" FIP X 5/8" O.D COMP.FOR AG150 SERIES INLET CONNECTION

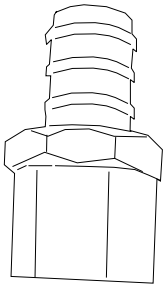

Order #: AG170-005

51024, WHITE 5/8" ID INSERT BARB X 1/2" PVC SLIP FOR AG 100 SERIES INLET PORT

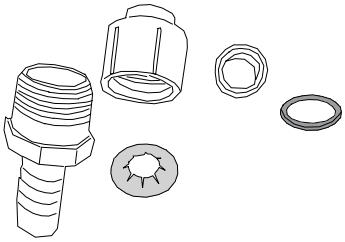

Order #: AG170-006

211217, 1/2" INSERT BARB X 5/8" O.D. COMPRESSION COUPLING FOR AG100 SERIES INLET CONNECTION

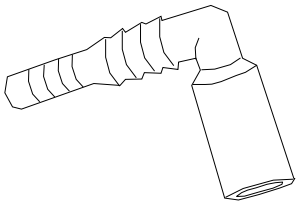

Order #: AG170-007

61017, DUAL BARB ELBOW FOR AG100 SERIES 1/2" INSERT BARB X1/4" ID /3/8" ID INSERT

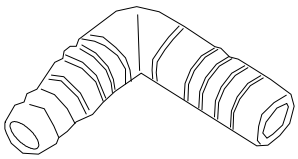

Order #: AG170-008

8504, DUAL BARB ELBOW FOR AG100/AG130-001 INLET CONNECTION,1/2" INSRT BARB X 1/2" ID /5/8" ID INSERT

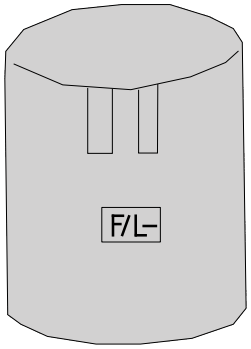

Order #: AG170-009

52007, 52007,ABS CHROME DECORATIVE CAP